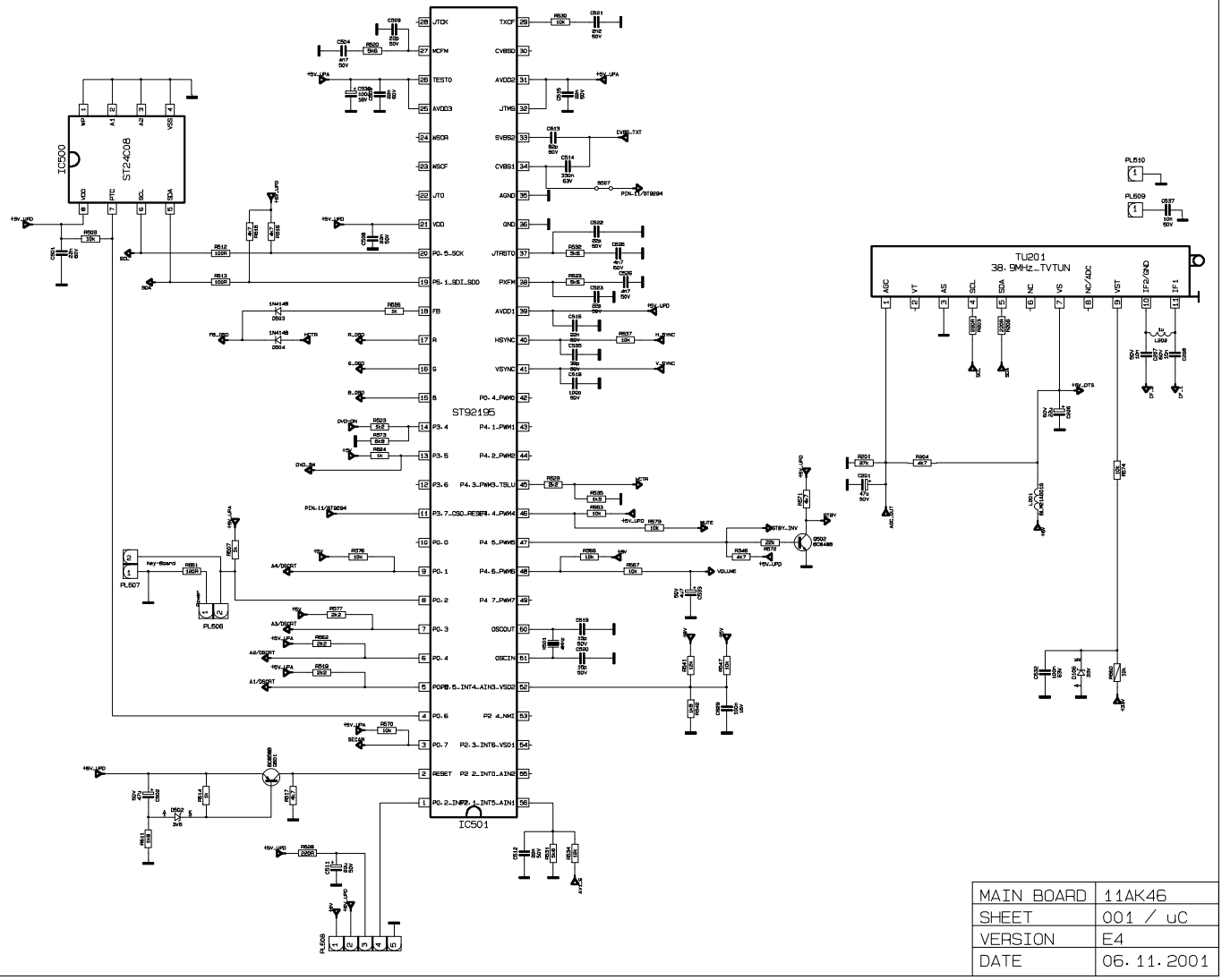


| | |
|---|---|
| MAIN BOARD | 11AK46 |
| SHEET | 001 / uC |
| VERSION | E4 |
| DATE | 06.11.2001 |